USA ILLUMINATION™

USAI, LLC

1126 River Road, New Windsor, NY 12553
Tel. 845-565-8500 Fax: 845-561-1130 email: info@usaillumination.com
www.usaillumination.com

CATALOG NUMBER

9411 9412 9413 9415 9416

SOLARIS 70SPF
SHALLOW PLENUM
COMPACT FLUORESCENT DOWNLIGHT
WITH
SUSPENDED GLASS

CEILING CUTOUT

8-3/4" Ø

LAMP / SOCKET

HORIZONTAL LAMPING
1X18W QUAD / G24q-2 - **9411**
1X26W QUAD / G24q-3 - **9412**
1X26W TRIPLE / GX24q-4 - **9413**
1X32W TRIPLE/ GX24q-4 - **9413**
1X42WTRIPLE / GX24q-4 - **9413**
2X18W QUAD / G24q-2 - **9415**
2X26W QUAD / G24q-3 - **9416**

GLASS

9-5/16" Ø
1/4" THICK TEMPERED.
SPECIFY:
SODA LIME - **SL**
BOROSILICATE - **BO**
SUSPENDED BY
3 CHROME
1/4" Ø STANDOFFS
AND 1/2" Ø
CHROME KNOBS.
ALL CLEAR - **AC**
ALL FROSTED - **AF**
CLEAR CENTER - **CC**
FROSTED CENTER - **FC**

TRIM RETENTION

FOR CEILING THICKNESS
UP TO 1-3/8".

BALLAST

ELECTRONIC
SPECIFY:
120V, 277V OR 347V

HOUSING SERIES

FABRICATED OF
DIE FORMED 20 GA.
GALVANIZED STEEL.
EXTERNAL THRU
WIRING BOX SUITABLE
FOR 90°C, #12 AWG
WIRE, 4 IN 4 OUT.

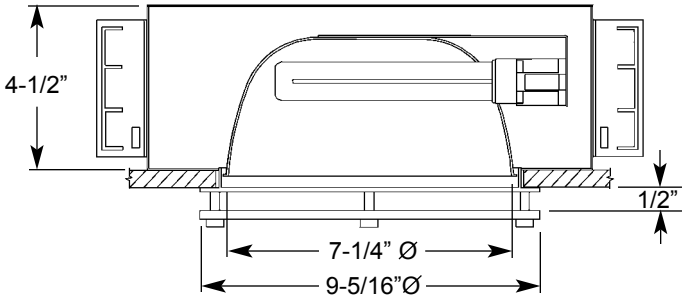

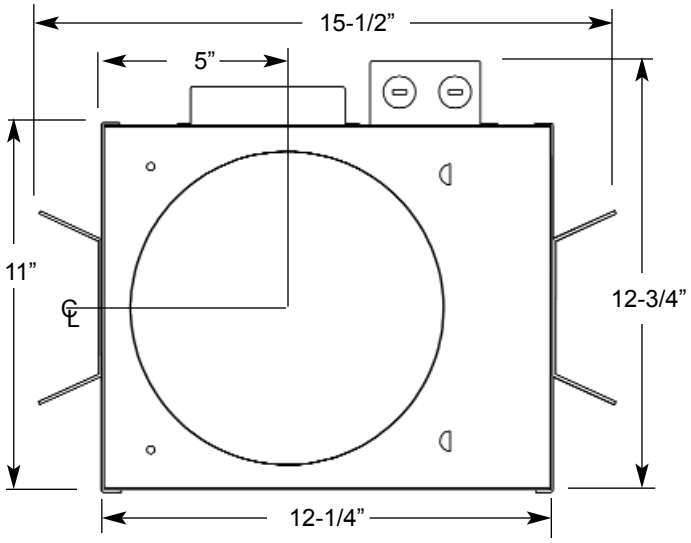

PLEASE CONSULT OUR WEBSITE AT WWW.USAILLUMINATION.COM
FOR ANY CHANGE IN SPECIFICATIONS

07/07

REFLECTOR

PRECISION MOLDED
POLYCARBONATE
VERTICALLY FACETED
FOR GLARE CONTROL AND
LIGHT DISTRIBUTION
VACUUM METALIZED FOR
MAXIMUM REFLECTANCE
AND EFFICIENCY.

TRIM FLANGE

DIE CAST ALUMINUM

ACCESSORIES

CB27 - 27"C-CHANNEL BARS
CB52 - 52"C-CHANNEL BARS
DIM - DIMMING BALLAST
EM - EMERGENCY BATTERY

FINISHES

10 - WHITE
21 - BLACK
28 - METALIZED GREY

MOUNTING

BUTTERFLY BRACKETS
AND ADJUSTABLE NAILER
BARS WITH INTEGRAL
NAILS PROVIDED. NAILER
BARS ARE EXTENDIBLE
FROM 14" TO 24" CENTERS.
C-CHANNEL MOUNTING
BARS ARE AVAILABLE AS
ACCESSORIES.

LISTINGS

UL LISTED DRY/DAMP
LOCATION.
IBEW UNION MADE

ORDERING INFO.

_____ _____ _____ _____
FIXTURE - FINISH - GLASS - GLASS FINISH

TRIM _____ **PROJECT** _____ **TYPE** _____

USA ILLUMINATION™

USAI, LLC

1126 River Road, New Windsor, NY 12553
Tel. 845-565-8500 Fax: 845-561-1130 email: info@usaillumination.com
www.usaillumination.com

PHOTOMETRIC DATA

9415

PERFORMANCE DATA

9415

LTL REPORT NO.: 08471
TOTAL LUMINAIRE EFFICIENCY: 46.3%
CIE TYPE: DIRECT
PLANE: 0-DEG 90-DEG
SPACING CRITERIA: 1.3 1.2
LAMP LUMENS: TWO 18W QUAD COMPACT FLUORESCENT LAMPS RATED AT 1200 LUMENS EACH.
TOTAL INPUT WATTS = 30.1

COEFFICIENTS OF UTILIZATION - ZONAL CAVITY METHOD

EFFECTIVE FLOOR CAVITY REFLECTANCE 0.20

pfc=	0.20																	
pcc->		0.80				0.70				0.50			0.30			0.10		0.0
pw->	0.7	0.5	0.3	0.1	0.7	0.5	0.3	0.1	0.5	0.3	0.1	0.5	0.3	0.1	0.0	0.0	0.0	0.0
RCR																		
0	55	55	55	55	54	54	54	54	51	51	51	49	49	49	47	47	47	46
1	51	48	46	45	49	47	45	44	45	44	42	43	42	41	39	39	39	38
2	46	42	39	37	45	41	39	36	40	37	35	38	36	34	33	33	33	32
3	42	38	34	31	41	37	33	31	35	32	30	34	31	29	28	28	28	27
4	39	33	30	26	38	33	29	26	31	28	26	30	27	25	24	24	24	24
5	36	30	26	23	35	30	26	23	28	25	22	27	24	22	21	21	21	21
6	33	27	23	20	32	27	23	20	26	22	20	25	22	20	18	18	18	18
7	31	25	21	18	30	24	21	18	24	20	18	23	20	17	16	16	16	16
8	29	23	19	16	28	22	19	16	22	18	16	21	18	16	15	15	15	15
9	27	21	17	15	26	21	17	15	20	17	14	19	16	14	13	13	13	13
10	25	19	16	13	25	19	16	13	19	15	13	18	15	13	12	12	12	12

CANDELA DISTRIBUTION

	0.0	22.5	45.0	67.5	90.0	112.5	135.0	157.5	180.0
0.0	450	450	450	450	450	450	450	450	450
5.0	454	456	457	459	445	445	437	432	434
15.0	452	455	457	457	437	422	400	382	380
25.0	415	420	422	427	400	377	340	318	315
35.0	354	360	357	348	335	307	271	252	249
45.0	268	273	278	279	257	242	214	192	180
55.0	185	188	203	198	185	170	151	133	125
65.0	118	123	125	123	109	97	88	80	79
75.0	65	69	73	79	75	71	69	72	74
85.0	27	27	28	28	26	25	25	24	23
90.0	4	4	5	5	4	4	4	3	3

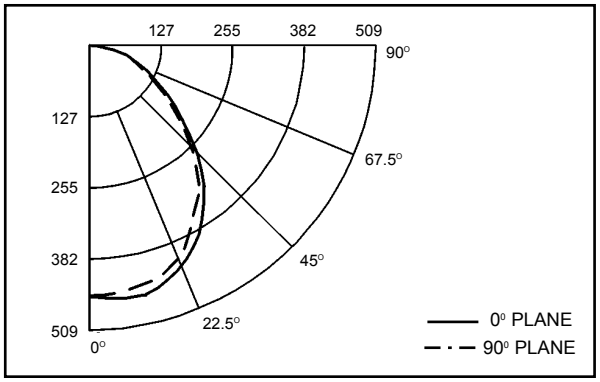

Actual results may vary. All dimensions and data subject to change.